PROJECT REFERENCE NO.	SHEET NO.
W-5205QA	Sig. 3

ADVANCE BEACON RELAY CONTROL AND SIGN WIRING DETAIL AT REMOTE CABINET

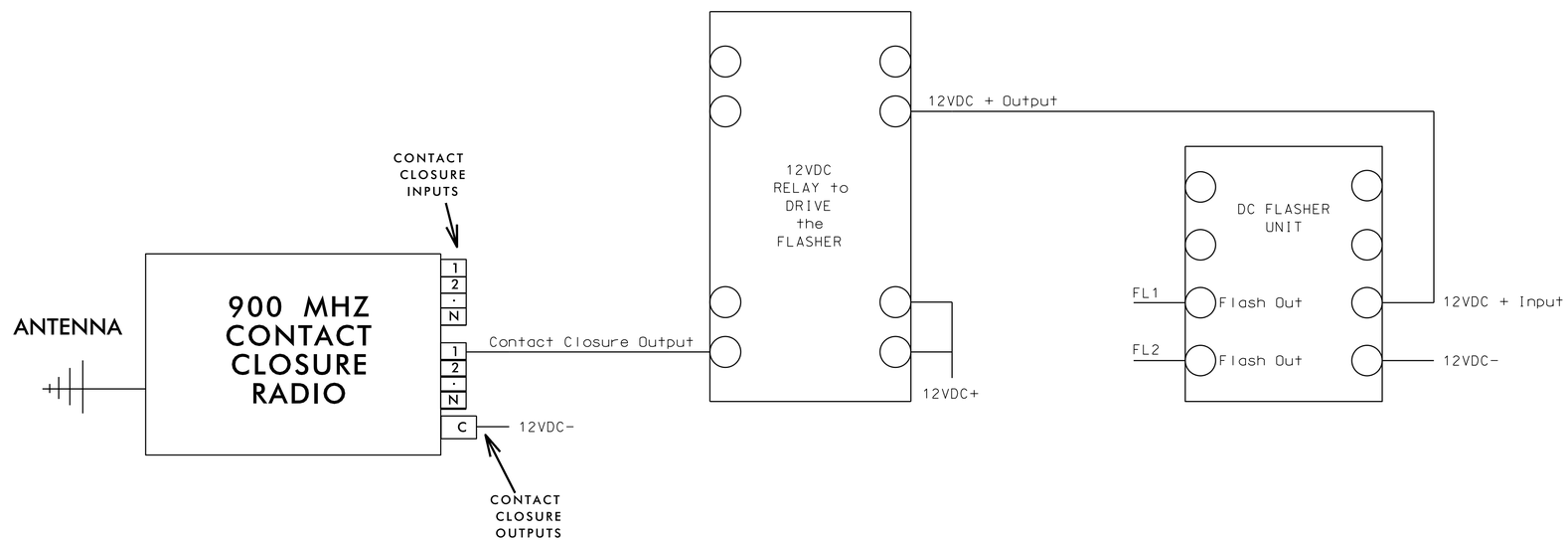

CABINET NOTES

1. ALL EQUIPMENT SHALL BE LOCATED WITHIN POLE MOUNTED TYPE 3R CABINET.
2. DC FLASHER UNIT SWITCHES THE NEGATIVE SIDE OF THE LOAD.
3. POWER FOR ALL COMPONENTS LOCATED AT REMOTE SITE SHALL BE SOURCED BY SOLAR POWER SYSTEM.
4. ALL WIRES ARE 16 AWG.

REMOTE CABINET SOLAR POWER

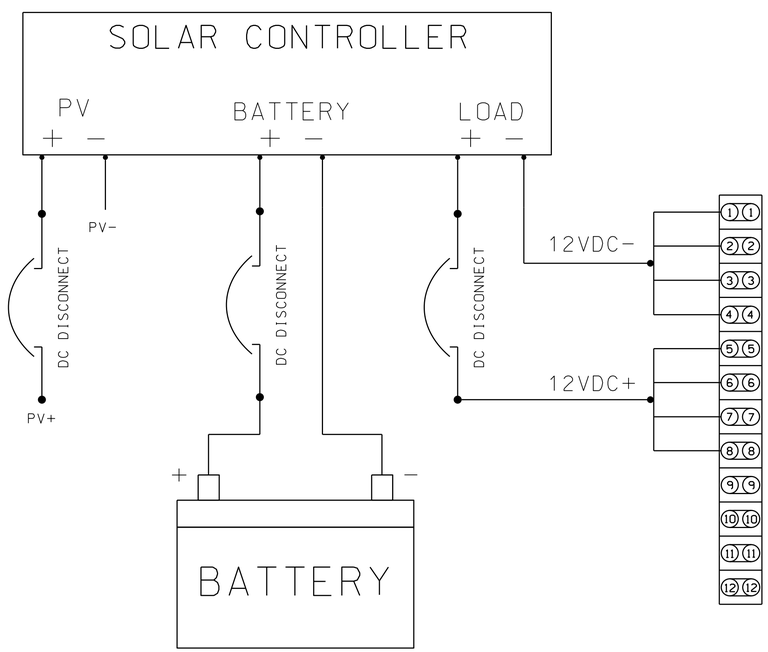

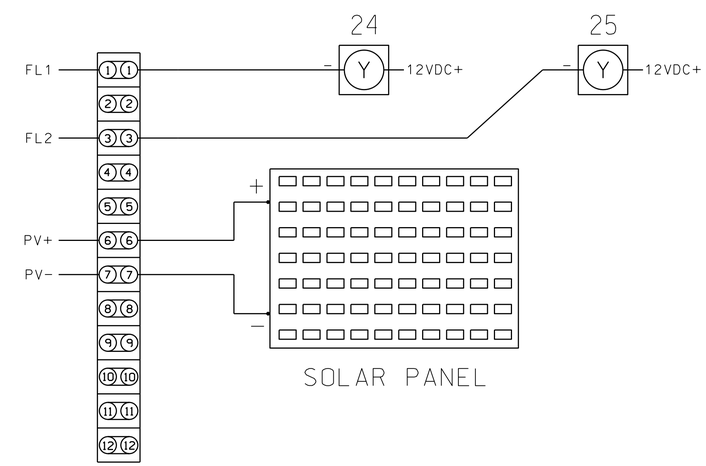

THIS ELECTRICAL DETAIL SUPERSEDES THE DETAIL SEALED ON 10/21/14

THIS ELECTRICAL DETAIL IS FOR
THE SIGNAL DESIGN: 05-1046
DESIGNED: February 2015
SEALED: 2/20/2015
REVISED: N/A

Electrical Detail - Temp - Sheet 3 of 3

ELECTRICAL AND PROGRAMMING DETAILS FOR:

Prepared in the Offices of:

Traffic Engineering and Safety Systems Branch
STATE OF NORTH CAROLINA DEPARTMENT OF TRANSPORTATION
Signals Management Section

750 N. Greenfield Pkwy, Garner, NC 27529

US 70 EB-401 SB/NC 50 SB
(N. Dawson Street)
at
W. Lane Street

Division 5 Wake County Raleigh

PLAN DATE: February 2015	REVIEWED BY: T. Joyce		
PREPARED BY: C. Strickland	REVIEWED BY:		
REVISIONS		INIT.	DATE

SEAL

NORTH CAROLINA PROFESSIONAL SEAL 022013 ENGINEER GEORGE C. BROWN

DocuSigned by: George C. Brown 3/5/2015
F12801ED0BEB434
DATE

SIG. INVENTORY NO. 05-1046

25-FEB-2015 11:18
S:\TISAS\M\TS Signals\Workgroups\Sig Mon\Strickland\051046_sm_ele_xxx.dgn
castrickland